www.ersatzteil-service.de

Jonsered

SERVICE

3

I0100026

IPL, LT 12, 2001-02, 106 27 06-61

JLT12B

LT12

Spare parts
Ersatzteile
Pièces détachées
Reserve onderdelen
Repuestos
Reservdelar

106 27 06-61

Ihr Ersatzteilspezialist im Internet

www.ersatzteil-service.de

REPAIR PARTS

TRACTOR - MODEL NO. LT12 (JLT12B), PRODUCT NO. 954 13 00-44

ELECTRICAL

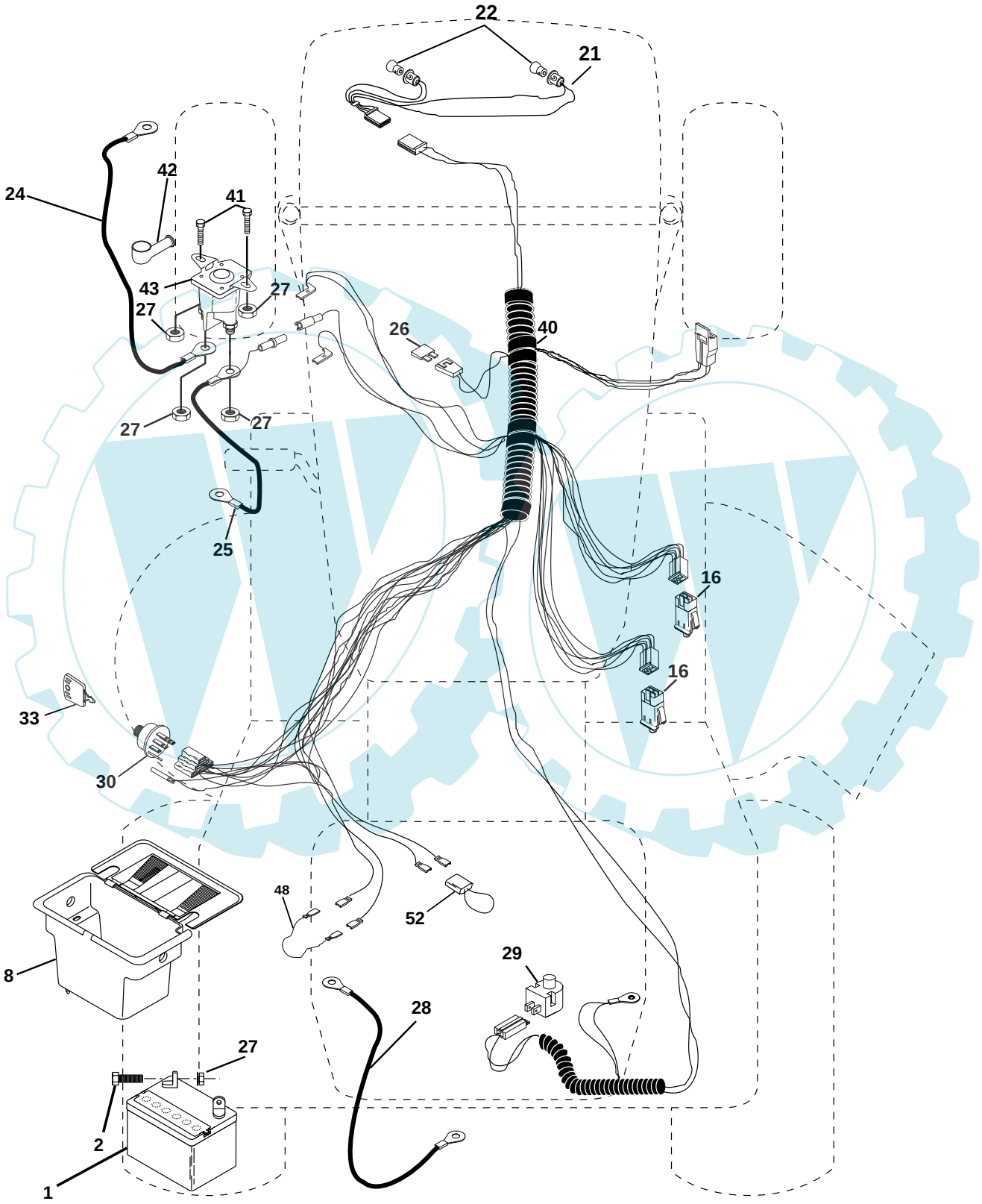

Ihr Ersatzteilspezialist im Internet

www.ersatzteil-service.de

REPAIR PARTS

TRACTOR - MODEL NO. LT12 (JLT12B), PRODUCT NO. 954 13 00-44

ELECTRICAL

KEY NO.	PART NO.	DESCRIPTION
1	532144925	Battery 12 Volt 25 AMP
2	874760412	Bolt Hex Hd 1/4-20unc X 3/4
8	532156417	Case Battery Mech Hinge
16	532153664	Switch Interlock Push-In
21	532166182	Harness Asm Light W/4152j
22	532004152	Bulb Light #1156
24	532124780	Cable Battery 6 Ga 11" red
25	532146147	Cable Battery 6 Ga 44" red w/16 wire
26	532175158	Fuse 20 AMP
27	873510400	Nut Keps Hex 1/4-20 Unc
28	532124773	Cable Ground 6 Ga 12" black
29	532121305	Switch Plunger Nc Gray
30	532175566	Switch Ign
33	532140401	Key Ign
40	532170217	Harness Ign.
41	871110408	Bolt Blk Fin Hex 1/4 - 20 x 1/2
42	532131563	Cover Terminal Red
43	532175141	Solenoid
48	532140844	Adapter Ammeter
52	532141940	Protection Wire Loop

NOTE: All component dimensions given in U.S. inches.
1 inch = 25.4 mm.

Ihr Ersatzteilspezialist im Internet

www.ersatzteil-service.de

REPAIR PARTS

TRACTOR - MODEL NO. LT12 (JLT12B), PRODUCT NO. 954 13 00-44

CHASSIS AND ENCLOSURES

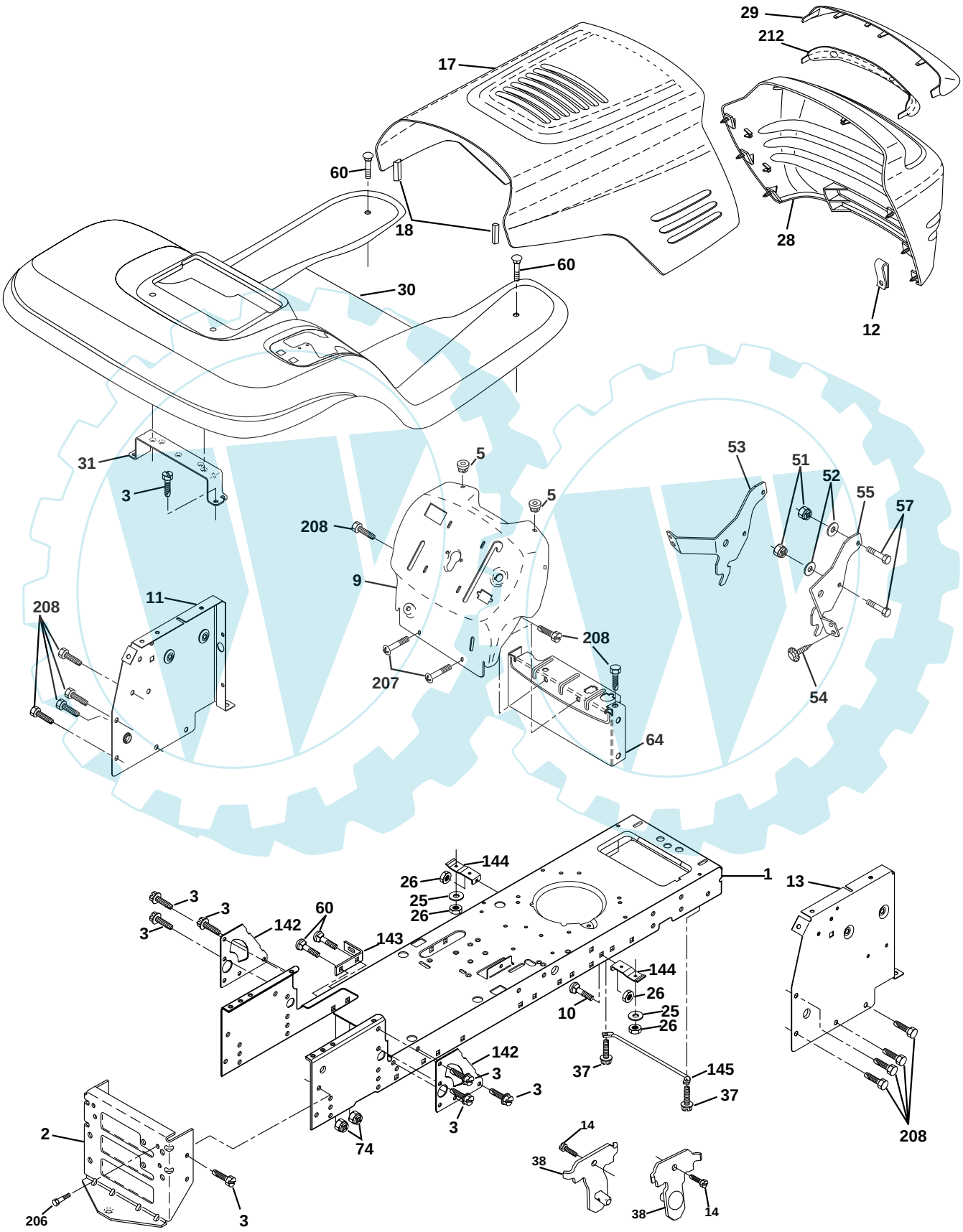

Ihr Ersatzteilspezialist im Internet

www.ersatzteil-service.de

REPAIR PARTS

TRACTOR - MODEL NO. LT12 (JLT12B), PRODUCT NO. 954 13 00-44

CHASSIS AND ENCLOSURES

KEY NO.	PART NO.	DESCRIPTION
1	**532174619**	Chassis Weldment
2	**532176554**	Drawbar
3	817060612	Screw 3/8-16 x .75 SMGML
5	532155272	Bumper Hood/Dash
9	532172151	Dash P/L
10	872140608	Bolt Carriage 3/8-16 x 1
11	532155927	Panel Dash Lh
12	532145660	Clip Tinnerman Grille P/L
13	532173025	Panel Dash Rh
14	**817490608**	Screw Thdrol 3/8-16 x 1/2
17	532150760	Hood LT/PL with Louvers
18	532126938	Bumper Hood
25	819131312	Washer 13/32 X 13/16 X 12 Ga
26	873800600	Nut Lock Hex W/Ins 3/8-16 Unc
28	532169509	Grill/Lens Asm.
29	532166603	Lens LT/PL Grille Shark Plain
30	532172157	Fender Footrest
31	532139976	Bracket Support Fender
37	817490508	Screw Thdrol 6/16-18 x 1/2 TYT
38	532169834	Bracket, Asm. Pivot
51	873800400	Nut Lock Hex W/Ins 1/4-20
52	819091416	Washer 9/32 x 7/8 x 16 Ga.
53	532145201	Bracket Pnt. Pickoff LH
54	532161464	Screw Hex Wshd 8-18 x 7/8
55	532145202	Bracket Grille Pickoff RH
57	874780412	Bolt Hex 1/4-20 x 3/4
60	872140606	Bolt Rdhd Sqnk 3/8-16unc x 3/4
64	532154798	Dash Lower STLT
74	873680600	Nut Crownlock 3/8-16 UNC
142	532165867	Plate Reinforcement STLT
143	532154966	Bracket Swaybar Chassis
144	532154207	Bracket Pnt Footrest STLT
145	532156524	Rod Pivot Chassis/Hood
206	532170165	Bolt Shoulder 5/16-18
207	817670508	Screw Thdrol 5/16-18 x 1/2
208	817670608	Screw Thdrol 3/8-16 x 1/2
212	532165919	Insert Lens Reflective
- -	532005479	Plug Button

NOTE: All component dimensions given in U.S. inches
1 inch = 25.4 mm

Ihr Ersatzteilspezialist im Internet

www.ersatzteil-service.de

REPAIR PARTS

TRACTOR - MODEL NO. LT12 (JLT12B), PRODUCT NO. 954 13 00-44

DRIVE

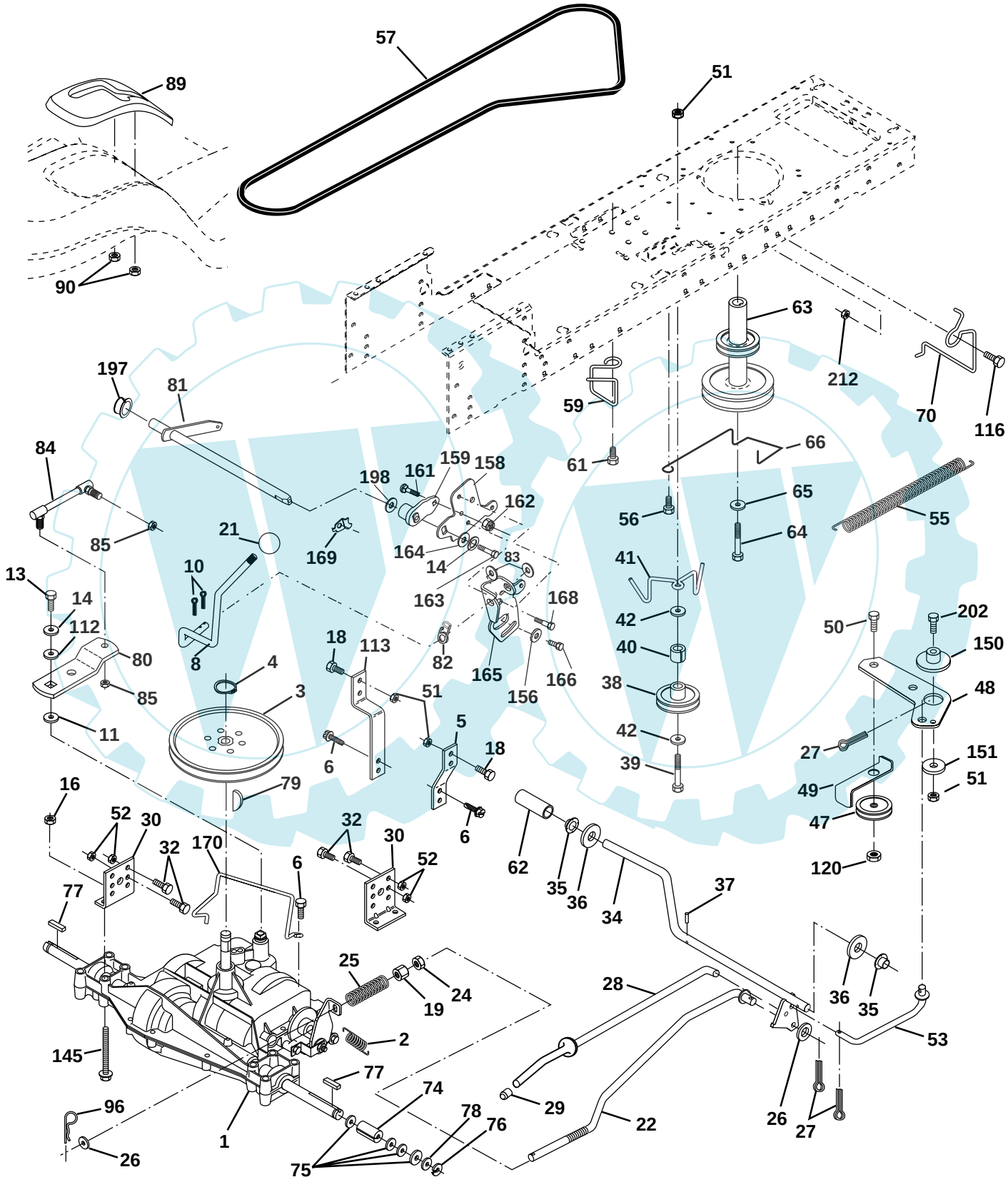

Ihr Ersatzteilspezialist im Internet

www.ersatzteil-service.de

REPAIR PARTS

TRACTOR - MODEL NO. LT12 (JLT12B), PRODUCT NO. 954 13 00-44

DRIVE

KEY NO.	PART NO.	DESCRIPTION
1	- - - - - - - - -	Transaxle Peerless 205-544C Order parts from transaxle manufacturer
2	532146682	Spring Return Brake T/a Zinc
3	532123666	Pulley Transaxle 18" tires
4	812000028	Ring Retainer # 5100-62
5	532121520	Strap Torque 30 Degrees
6	817060512	Screw Thdrol 5/16-18
8	532165866	Rod Shift Fender Adjust Lt
10	876020416	Pin Cotter 1/8 X 1 Cad
11	532105701	Washer Plate Shf 388 Sq Hole
13	874550412	Bolt 1/4-28 Unf Gr 8 W/Patch
14	810040400	Washer Lock Hvy Helical
16	873800500	Nut Lock Hex w/Ins 5/16-18
18	874780616	Bolt, Fin Hex 3/8-16 UNC x 1 Gr. 5
19	873800600	Nut Lock 3/8-16 Unc
21	532121274	Knob
22	532130804	Rod Brake Blk Zinc 26 840
24	873350600	Nut Hex Jam 3/8-16 Unc
25	532106888	Spring Rod Brake 2 00 Zinc
26	819131316	Washer 13/32 X 13/16 X 16 Ga
27	876020412	Pin Cotter 1/8 X 3/4 Cad
28	**532175765**	Rod Brake Parking LT/YT
29	532071673	Cap Brake Parking Black
30	532174973	Bracket Mtg Transaxle
31	532127275	Keeper Belt LH
32	874760512	Bolt Hex Hd 5/16-18unc X 3/4
34	**532175578**	Shaft Asm Pedal Foot
35	532120183	Bearing Nylon Blk 629 Id
36	819211616	Washer 21/32 X 1 X 16 Ga
37	532124963	Pin Roll 3/16 X 1"
38	**532165936**	Pulley Idler Flat
39	**874760648**	Bolt Fin Hex 3/8-16 Unc x 3
40	**532175461**	Spacer Split
41	**532175556**	Keeper Belt Idler Flat
42	819131312	Washer 13/32 X 13/16 X 12 Ga
47	532127783	Pulley Idler V Groove Plastic
48	532154407	Bellcrank Clutch Grnd Driv
49	532123205	Retainer Belt Style Spring
50	874760624	Bolt Hex Hd 3/8-16unc X 1-1/2
51	873680600	Nut Crownlock 3/8-16 Unc
52	873680500	Nut Crownlock 5/16-18 Unc
53	532105710	Link Clutch
55	532105709	Spring Return Clutch 6 75
56	**817060616**	Screw 3/8-16 X 1.0
57	532130801	V-Belt Ground Drive 95 25
58	532127274	Keeper Belt RH
59	532169691	Keeper Belt Span Ctr
61	817060612	Screw 3/8-16 x .75
62	532124872	Cover Pedal Round
63	**532175410**	Engine Pulley LT/YT
64	871170764	Bolt Hex
65	810040700	Washer Lock Hvy Hlcl Spr 7/16
66	532154778	Keeper Belt Engine Foolproof
70	532134683	Guide Belt Mower Drive RH
74	532137057	Spacer Axle
75	532121749	Washer 25/32 X 1 1/4 X 16 Ga
76	812000001	E-ring #5133-75
77	532123583	Key Square 2 0 X 1845/ 1865
78	532121748	Washer 25/32 X 1-5/8 X 16 Ga
79	532125096	Key Woodruff #9 3/16 x 3/4
80	532131486	Arm Shift
81	532165594	Shaft Asm Cross 18"t
82	532165711	Spring Torsion T/a
83	819171216	Washer 17/32 X 3/4 X 16 Ga
84	532166228	Link Transaxle
85	532150360	Nut Lock Center 1/4 - 28 FNTHD
89	532176579	Console Shift STLT
90	532124346	Nut Self-thd Wsh-hd 1/4 Zinc
96	532124788	Retainer Spring 1"
112	819091210	Washer 9/32 x 3/4 x 10 Ga.
113	532127285	Strap Torque LT
116	**872110608**	Bolt Rdhd Sq Neck 3/8-16 x 1.0
120	**873900600**	Nut Lock Flg. 3/8-16 Unc
145	874490540	Bolt Hex 5/16-18 Gr. 5
150	**532175456**	Spacer
151	819133210	Washer 13/32 x 2 x 10 Ga.
156	532166002	Washer Srrted 5/16ID x 1.125
158	532165589	Bracket Shift Mount
159	532165494	Hub Tapered Flange Shift Lt
161	872140406	Bolt Rdhd Sqnk 1/4-20 x 3/4 Gr 5
162	873680400	Nut Crownlock 1/4-20 Unc
163	874780416	Bolt Hex Fin 1/4-20 Unc x 1 Gr 5
164	819091010	Washer 5/8 x .281 x 10 Ga
165	532165623	Bracket Pivot Lever
166	532166880	Screw 5/16-18 x 5/8
168	532165492	Bolt Shoulder 5/16-18 x .561
169	532165580	Plate Fastening Lt
170	**532173898**	Keeper, Belt T/A D/P
197	532169613	Nyliner Snap-In
198	532169593	Washer Nyl 7/8 ID x 105"
202	**872110614**	Bolt Carr. SH 3/8-16 x 1-3/4 Gr. 5
212	**532145212**	Nut, Hex Flange Lock

NOTE: All component dimensions given in U.S. inches
1 inch = 25.4 mm

Ihr Ersatzteilspezialist im Internet

www.ersatzteil-service.de

REPAIR PARTS

TRACTOR - MODEL NO. LT12 (JLT12B), PRODUCT NO. 954 13 00-44

STEERING ASSEMBLY

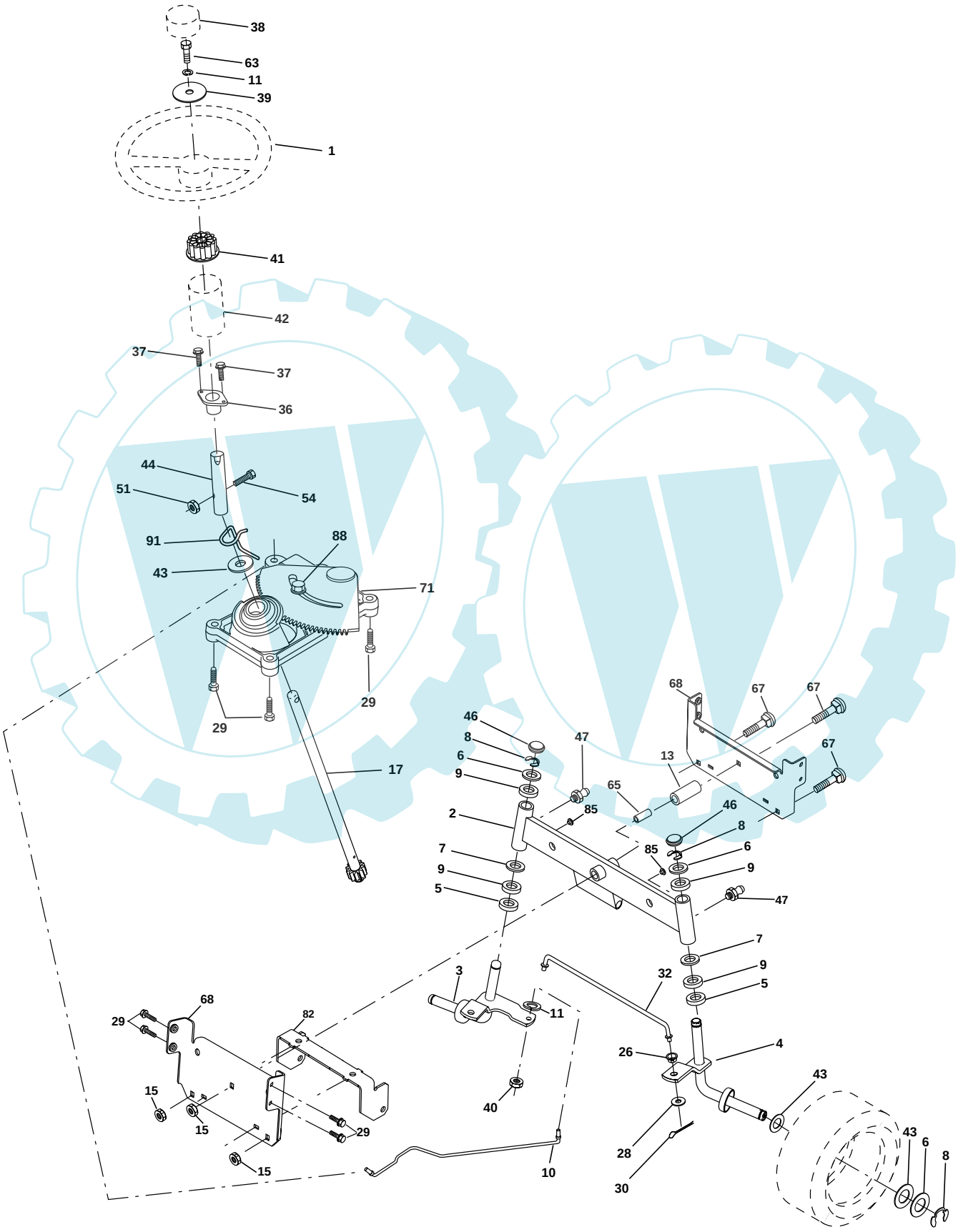

Ihr Ersatzteilspezialist im Internet

www.ersatzteil-service.de

REPAIR PARTS

TRACTOR - MODEL NO. LT12 (JLT12B), PRODUCT NO. 954 13 00-44

STEERING ASSEMBLY

KEY NO.	PART NO.	DESCRIPTION
1	**532177182**	Wheel Steering
2	532154427	Axle Asm STMP Dropped STL
3	532169840	Spindle Asm LH
4	532169839	Spindle Asm RH
5	532124931	Bearing Race Thrust Harden
6	532121748	Washer 25/32 X 1-5/8 X 16 Ga
7	819272016	Washer 27/32 X 1-1/4 X 16 Ga
8	812000029	Ring Klip #t5304-75
9	532124937	Bearing Col Strg Blk
10	**532175121**	Link Drag
11	810040600	Washer Lock Hvy Hlcl Spr 3/8
13	532136518	Bearing Axle STLT/GT
15	532145212	Nut Hexflange Lock
17	**532177876**	Shaft Asm Strg
26	532126847	Bushing Link Drag Blk LR
28	819131416	Washer 13/32 X 7/8 X 16 Ga
29	817060612	Screw 3/8-16x3/4 SMGML
30	876020412	Pin Cotter 1/8 X 3/4 Cad
32	532130465	Rod Tie Wire Form 19 75 Mech
36	532155099	Bushing Strg
37	532152927	Screw
38	**532177183**	Insert Cap Strg Wh
39	819133812	Washer 13/32 X 2-3/8 X 8 Ga
40	532124701	Lock nut
41	532100711	Adaptor Wheel Strg
42	532169633	Boot Steering Shaft
43	532121749	Washer 25/32 X 1 1/4 X 16 Ga
44	532153720	Extension Steering Shaft LR/LT
46	532121232	Cap Spindle Fr Top Blk
47	532124836	Fitting Grease
51	873800500	Nut Lock Hex w/Ins 5/16-18
54	874780520	Bolt Fin Hex 5/16-18 Unc x 1-1/4
63	874780616	Bolt Fin Hex 3/8-16unc x 1 Gr. 5
65	532160367	Spacer Axle
67	872110618	Bolt RDHD SQNK 3/8-16 x 2-1/4
68	532169827	Axle, Brace
71	**532175146**	Steering Asm.
82	532169835	Bracket Susp Chassis Front
85	532133835	Fastner Christmas Tree
88	**532175118**	Bolt Shoulder 7/16-20 Unc
91	**532175553**	Clip Steering

NOTE: All component dimensions given in U.S. inches.
1 inch = 25.4 mm.

Ihr Ersatzteilspezialist im Internet

www.ersatzteil-service.de

REPAIR PARTS

TRACTOR - MODEL NO. LT12 (JLT12B), PRODUCT NO. 954 13 00-44

ENGINE

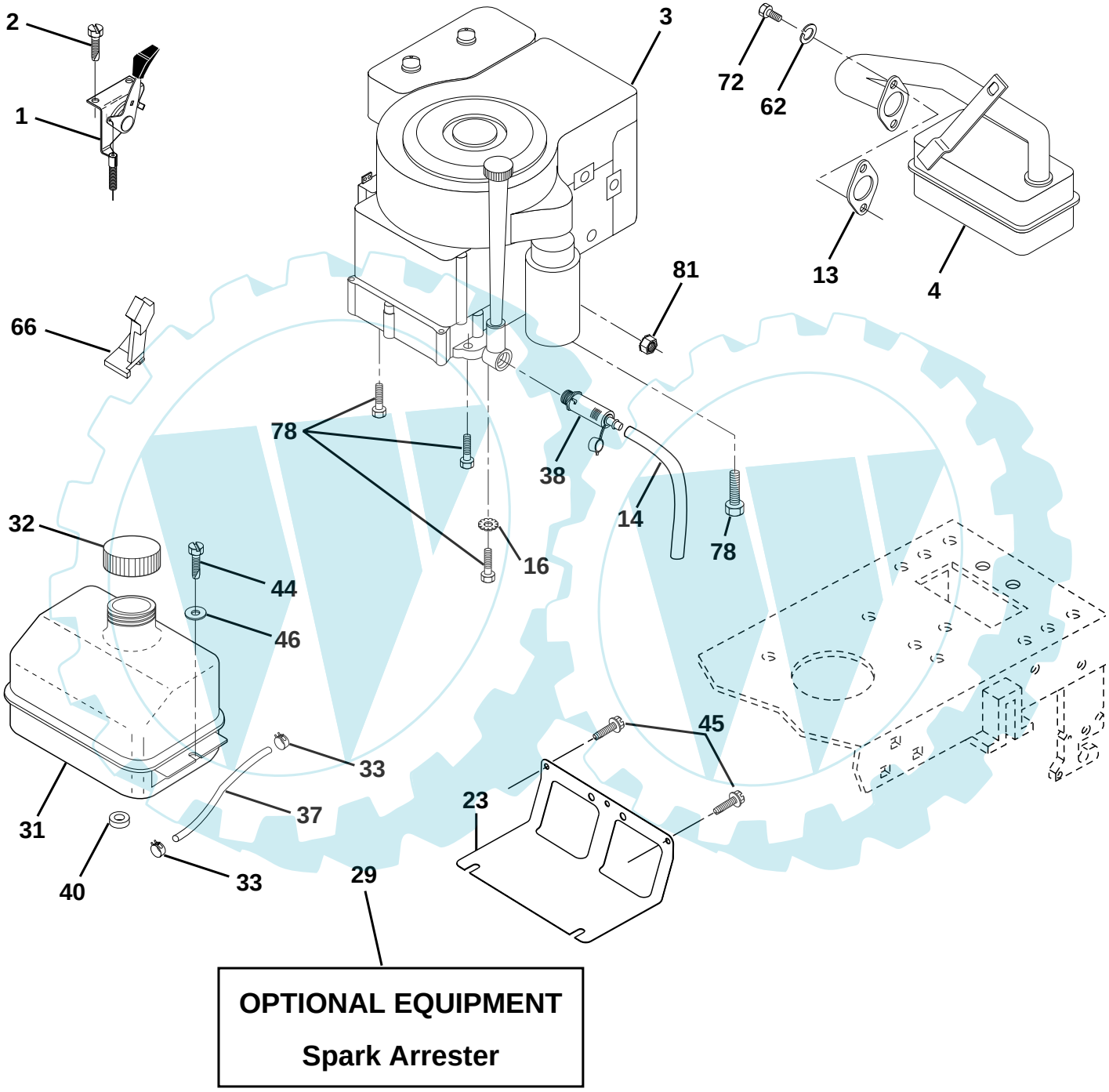

Ihr Ersatzteilspezialist im Internet

www.ersatzteil-service.de

REPAIR PARTS

TRACTOR - MODEL NO. LT12 (JLT12B), PRODUCT NO. 954 13 00-44

ENGINE

KEY NO.	PART NO.	DESCRIPTION
1	532170865	Control Th/ch LH Flag
2	817720410	Screw Hex Thd Cut 1/4-20x5/8 T
3	- - - - - - - -	Engine B&S Model No. 289707 (Order parts from engine manufacturer)
4	532137348	Muffler
13	532165291	Gasket
14	532148456	Tube Drain Oil Easy
16	811050600	Washer Lock Ext Tooth 3/8
23	532169837	Shield Brn/Dbr Guard
29	532137180	Kit Spark Arrestor (Flat Scrn)
31	532109202	Tank Fuel Front
32	532140527	Cap Asm Fuel W/sym Vented
33	532123487	Clamp Hose Black
37	532137040	Line Fuel 20"
38	532148315	Plug Drain Oil Easy
40	532124028	Bushing Snap Nyl Blk Fuel Line
44	817670412	Screw Hexwsh Thdrol 1/4-20x3/4
45	817000612	Screw 3/8-16 x 3/4
46	819091416	Washer 9/32 X 7/8 X 16 Ga
62	810040500	Washer Lock Hvy Hlcl Spr 5/16
66	532127951	Stop Throttle 3000 RPM
72	871070512	Screw Hexhd Cap 5/16-18 x 3/4
78	817060620	Screw 3/8-16 x 1-1/4 SMGML
81	873510400	Nut Keps Hex 1/4-20

NOTE: All component dimensions given in U.S. inches
1 inch = 25.4 mm

Ihr Ersatzteilspezialist im Internet

www.ersatzteil-service.de

REPAIR PARTS

TRACTOR - MODEL NO. LT12 (JLT12B), PRODUCT NO. 954 13 00-44

SEAT ASSEMBLY

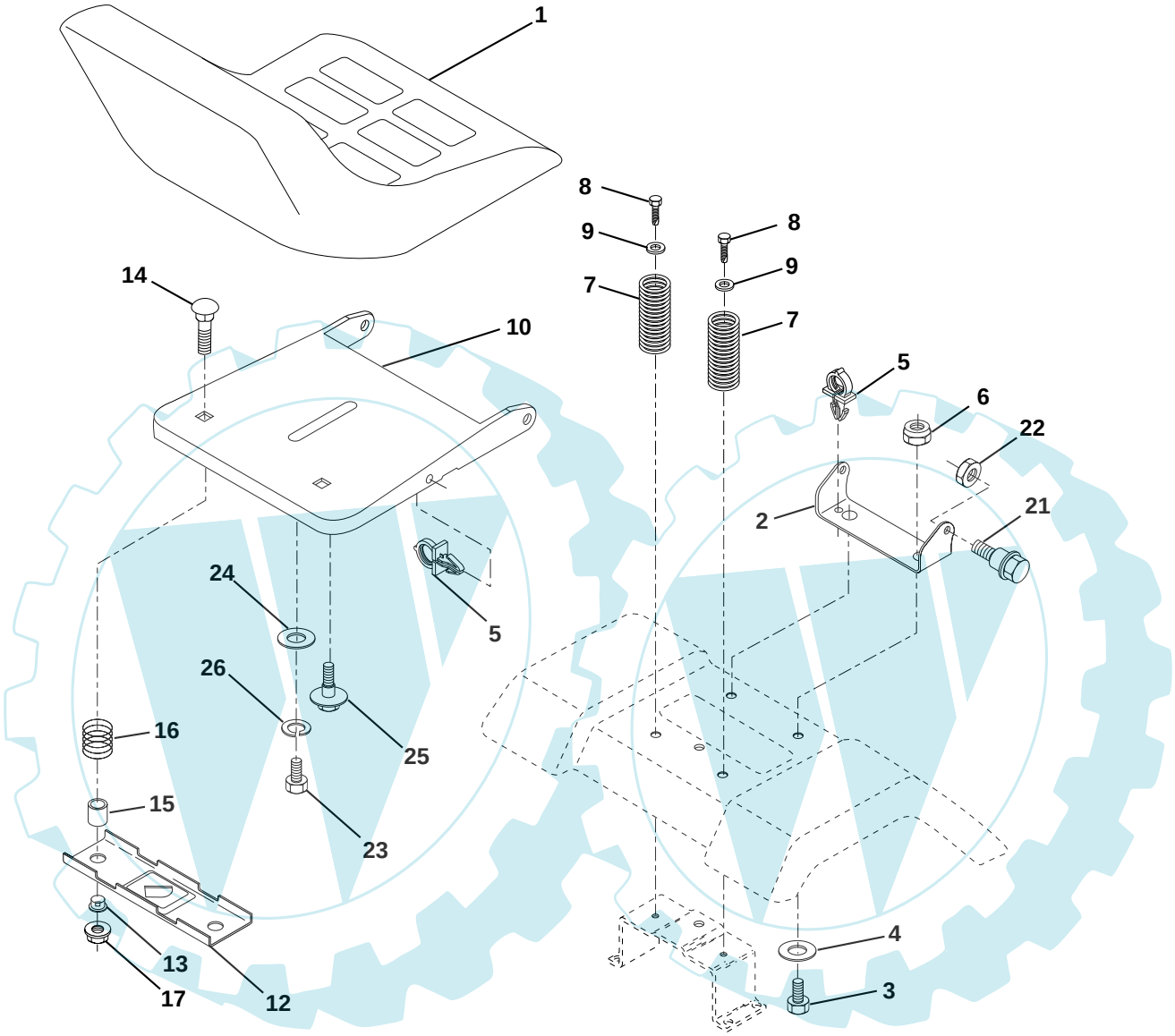

KEY NO.	PART NO.	DESCRIPTION
1	532140116	Seat
2	532140551	Bracket Pivot Seat 8 720
3	871110616	Bolt Fin Hex 3/8-16 Unc x 1
4	819131610	Washer 13/32 X 1 X 10 Ga
5	532145006	Clip Push-In
6	873800600	Nut Hex w/Ins. 3/8-16 Unc
7	532124181	Spring Seat Cprsn 2 250 Blk Zi
8	817000616	Screw 3/8-16 x 1.5 SMGML
9	819131614	Washer 13/32 X 1 X 14 Ga.
10	532174894	Pan Seat
12	532121246	Bracket Mounting Switch
13	532121248	Bushing Snap Blk Nyl 50 Id

KEY NO.	PART NO.	DESCRIPTION
14	872050412	Bolt Rdhd Sqnk 1/4-20x1-1/2
15	532134300	Spacer Split 28x96 Yel Zinc
16	532121250	Spring Cprsn 1.27 Blk Pnt
17	532123976	Nut Lock 1/4 Lge Flg Gr 5 Zinc
21	532171852	Bolt SHLD 5/16-18 Unc-2A
22	873800500	Nut Hex Lock W/Ins 5/16-18
23	871110814	Bolt Hex
24	819171912	Washer 17/32 X 1-3/16 X 12 Ga.
25	532127018	Bolt Shoulder 5/16-18 X 62
26	810040800	Washer Lock Hvy HLCL Spr. 1/2

NOTE: All component dimensions given in U.S. inches.
1 inch = 25.4 mm

Ihr Ersatzteilspezialist im Internet

www.ersatzteil-service.de

REPAIR PARTS

TRACTOR - MODEL NO. LT12 (JLT12B), PRODUCT NO. 954 13 00-44

DECALS

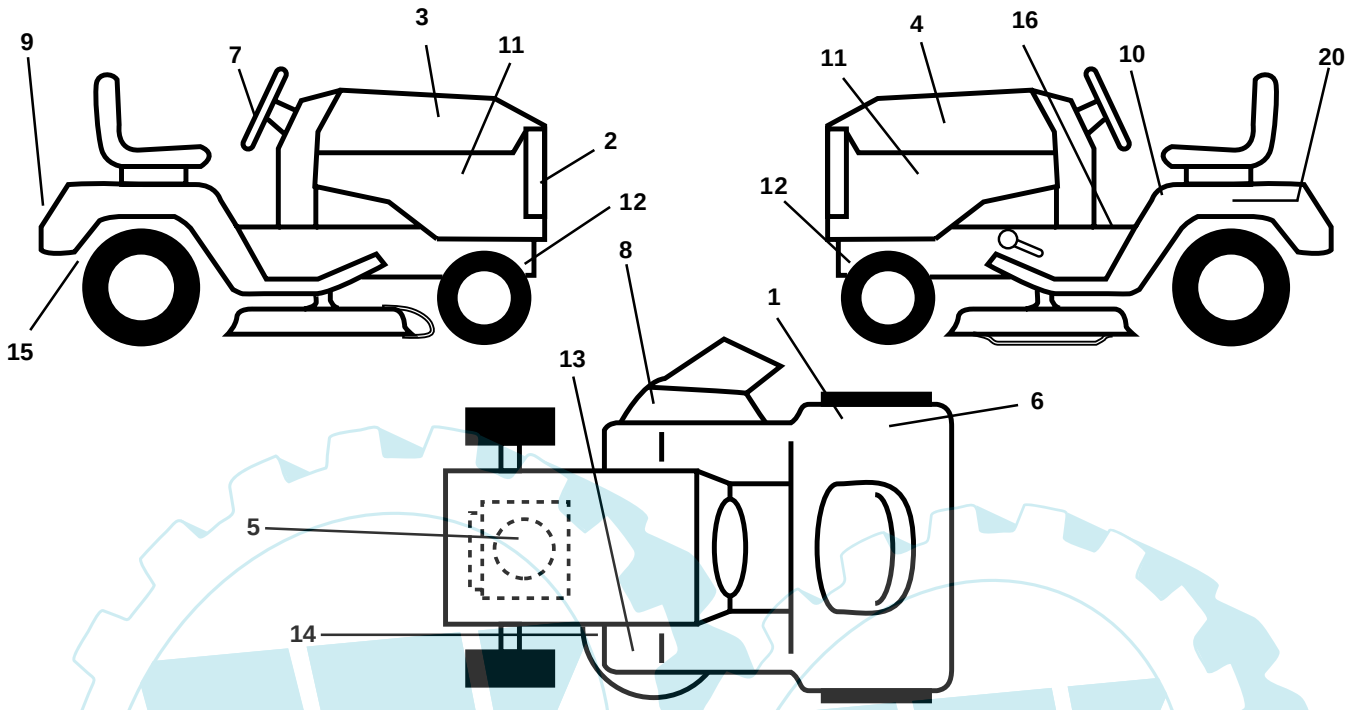

KEY NO.	PART NO.	DESCRIPTION
1	532126187	Decal 100 DBA
2	532152262	Decal Grille
3	532175885	Decal Hood RH
4	532175886	Decal Hood LH
5	532170832	Decal HP Engine
6	532145437	Decal Europe Stand CE
7	532175884	Decal, Ins. Strg Whl.
8	532145494	Decal Mower Cutfinger
9	532141761	Decal Fender Jonsered
10	532145498	Decal Read Owner's Manual Syms.
11	532162927	Decal Hood Insert B&S White
12	532159736	Decal Chassis Hot Muffler
13	532159737	Decal Brake/Clutch Symbol LT
14	532136832	Decal V-Belt Schematic
15	532162598	Decal Drawbar Load Limit
16	532140837	Decal Saddle Brake Parking
20	532145005	Decal Bat Dan/Psn
- -	532171284	Pad Footrest LH STLT
- -	532171285	Pad Footrest RH STLT
- -	532138311	Decal Handle Lift Height Adjust
- -	532176379	Manual Operator's (Euro.)
- -	532176380	Manual Operator's (Scan.)

WHEELS & TIRES

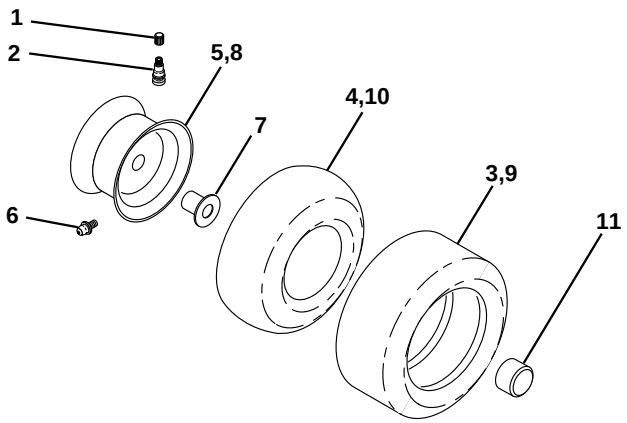

KEY NO.	PART NO.	DESCRIPTION
1	532059192	Cap Valve Tire
2	532065139	Stem Valve
3	532106222	Tire F Ts 15 X 6 0 - 6 Service
4	532059904	Tube Front (Service Item Only)
5	532138336	Rim Asm 6"front Silver Service
6	532124957	Fitting Grease (Front Wheel Only)
7	532124959	Bearing Flange (Front Wheel Only)
8	532138337	Rim Asm 8"rear Silver Service
9	532124635	Tire R Ts 18x9 5-8 C Service
10	532124926	Tube Rear (Service Item Only)
11	532175039	Cap Axle Blk 1 50 X 1 00
- -	532144334	Sealant, Tire (10 oz. Tube)

NOTE: All component dimensions given in U.S. inches
1 inch = 25.4 mm

Ihr Ersatzteilspezialist im Internet

www.ersatzteil-service.de

REPAIR PARTS

TRACTOR - MODEL NO. LT12 (JLT12B), PRODUCT NO. 954 13 00-44

MOWER DECK

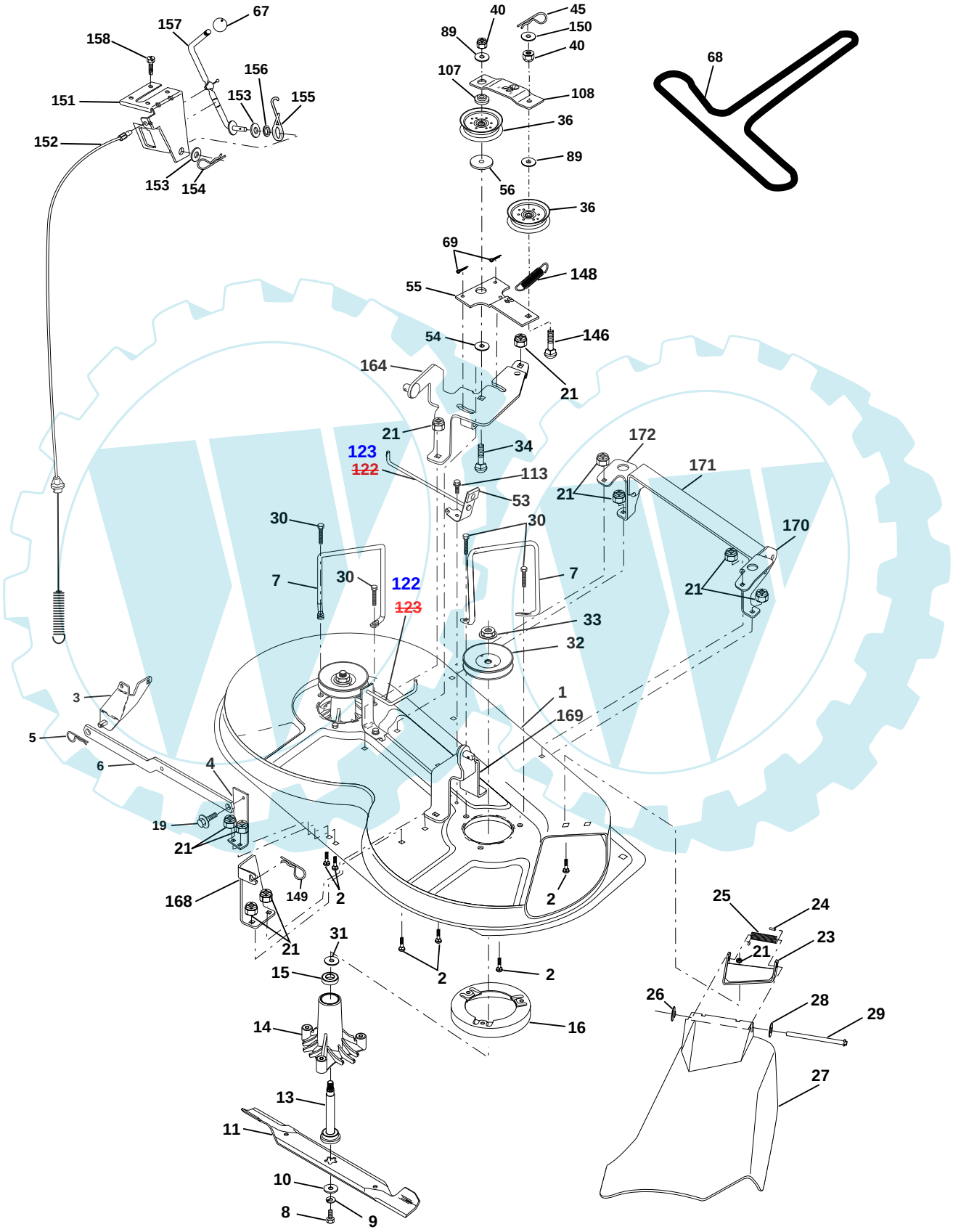

Ihr Ersatzteilspezialist im Internet

www.ersatzteil-service.de

REPAIR PARTS

TRACTOR - MODEL NO. LT12 (JLT12B), PRODUCT NO. 954 13 00-44

MOWER DECK

KEY NO.	PART NO.	DESCRIPTION
1	532174595	Mower Deck Assembly
2	872140506	Bolt
3	532138017	Bracket Assembly,Sway Bar
4	532175654	Bracket Sway Bar
5	532124670	Retainer Spring
6	532130832	Arm, Suspension, Rear
7	532140608	Keeper Belt
8	532850857	Bolt, Hex 3/8-24 x 1.25 Gr. 8
9	810030600	Washer, Lock Hvy Hlcl 3/8
10	532140296	Washer, Hardened
11	532138496	Blade, Mower
13	532137645	Shaft Assembly, Mandrel
14	532128774	Housing, Mandrel, Vented
15	532110485	Bearing, Ball, Mandrel
16	**532174493**	Stripper, Mower Deck
19	532132827	Bolt, Shoulder
21	873680500	Nut Crownlock 5/16-18
23	532136631	Bracket, Mower Deflector
24	532105304	Cap, Sleeve
25	532123713	Spring, Torsion, Deflector
26	532110452	Nut, Push
27	532176162	Shield, Deflector
28	819111016	Washer 11/32 x 5/8 x 16 Ga.
29	532121980	Rod, Hinge
30	532157722	Screw Thdrol Washer Head
31	532129963	Washer, Spacer
32	532153531	Pulley, Mandrel
33	532137266	Nut, Toplock, Flanged
34	872110614	Bolt Rdhd 3/8-16 x 1-3/4
36	532131494	Pulley, Idler, Flat
40	873680600	Nut Crownlock 3/8-16
45	532124788	Retainer, Spring
53	532130840	Brake Assembly
54	532133943	Washer, Hardened
55	532133840	Idler Arm Assembly
56	532165723	Spacer, Retainer
67	532106932	Knob RD 3/8-16 Plstc Thd
68	532174978	Belt
69	876020312	Pin, Cotter 3/32 x 3/4
89	819131612	Washer 13/32 x 1 x 12 Ga
107	532133502	Spacer, Retainer
108	532133503	Stiffener, Idler Arm
113	817490508	Screw Thdrol 5/16-18 x 1/2
122	532174505	Rod, Brake, LH
123	532174504	Rod, Brake, RH
146	532165891	Bolt Carriage Idler
148	532169022	Spring Return Idler
149	532165898	Retainer Spring Yellow Zinc
150	819091216	Washer 9/32 x 3/4 x 16 Ga.
151	532169670	Bracket Clutch
152	532176079	Cable Clutch
153	532169674	Washer Flat 3/8" Type B
154	532169675	Spring Retainer
155	532169671	Spring Retention Lever
156	532169672	Spacer
157	532169669	Rod Clutch
158	817720410	Screw Hex Thd Cut 1/4-20x5/8
164	532174976	Bracket Asm Idler Support
168	532172377	Bracket Deck Cable
169	532174977	Bracket Asm Suspension
170	532172359	Bracket Suspension RF
171	532165237	Brace Support Susp. Frt
172	532172355	Bracket Suspension LF
- -	532130794	Mandrel Assembly (Includes Key Numbers 13-15, 17-19, 31 and 33)
- -	532175254	Mower Deck, Complete

NOTE: All component dimensions given in U.S. inches
1 inch = 25.4 mm

Ihr Ersatzteilspezialist im Internet

www.ersatzteil-service.de

REPAIR PARTS

TRACTOR - MODEL NO. LT12 (JLT12B), PRODUCT NO. 954 13 00-44

MOWER LIFT

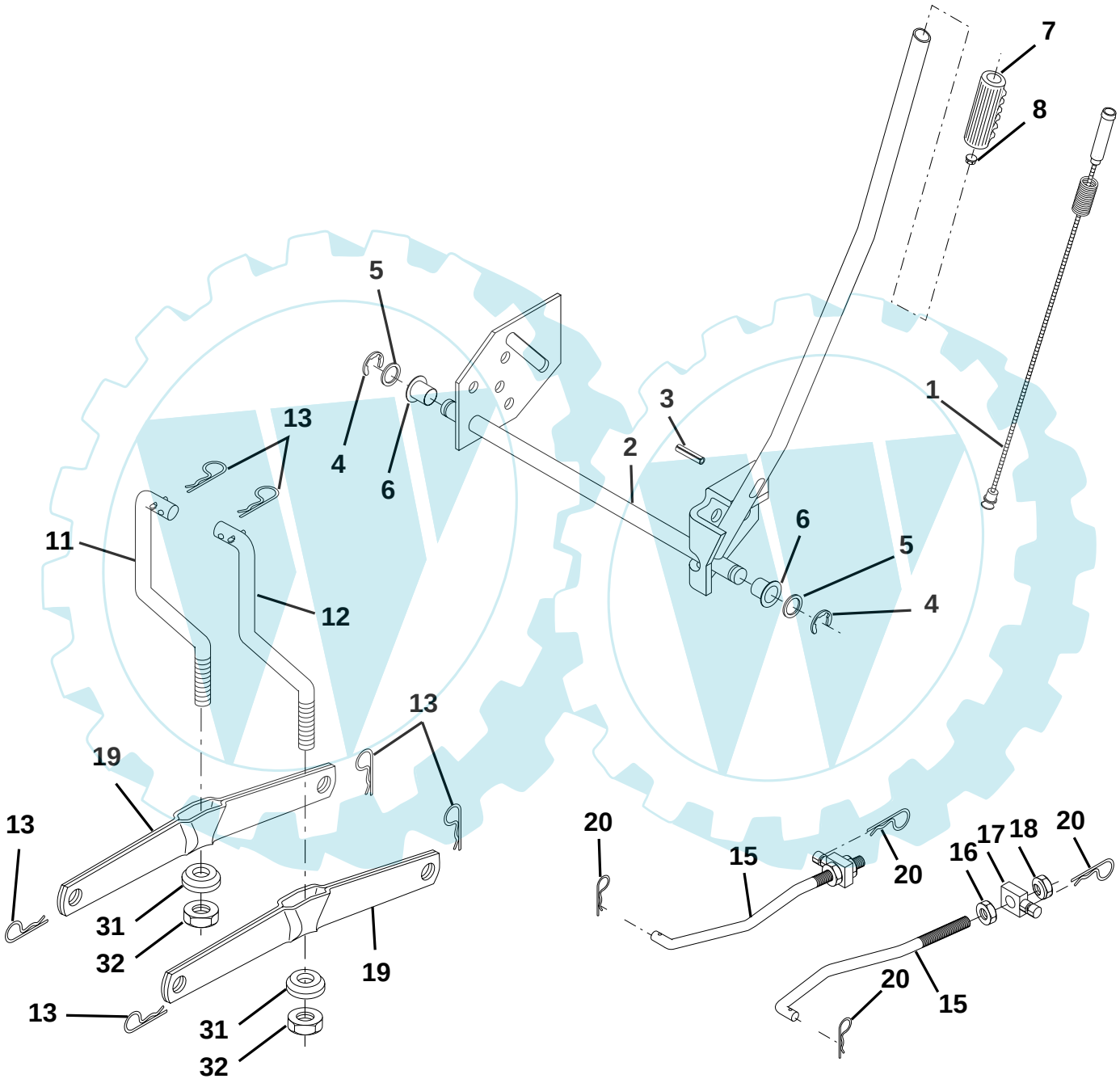

Ihr Ersatzteilspezialist im Internet

www.ersatzteil-service.de

REPAIR PARTS

TRACTOR - MODEL NO. LT12 (JLT12B), PRODUCT NO. 954 13 00-44

MOWER LIFT

KEY NO.	PART NO.	DESCRIPTION
1	532159460	Washer Asm Inner Spring W/Plunger
2	532159471	Shaft Asm. Lift
3	532105767	Pin Groove
4	812000002	E Ring #5133-62
5	819211621	Washer 21/32 x 1 x 21 Ga
6	532120183	Bearing Nylon
7	532109413	Grip Handle
8	**532122365**	Button Plunger
11	532139865	Link Lift LH
12	532139866	Link Lift RH
13	532124670	Retainer Spring
15	532173288	Link Front
16	873350800	Nut Jam Hex 1/2-13 Unc
17	532130171	Trunnion Blk Zinc
18	873800800	Nut Lock W/Wsh 1/2-13 Unc
19	532139868	Arm Suspension Mower
20	532163552	Retainer Spring
31	532169865	Bearing Pvt. Lift
32	873540600	Nut Crownlock 3/8-24

NOTE: All component dimensions given in U.S. inches
1 inch = 25.4 mm

Ihr Ersatzteilspezialist im Internet

www.ersatzteil-service.de

REPAIR PARTS

TRACTOR - MODEL NO. LT12 (JLT12B), PRODUCT NO. 954 13 00-44

SCHEMATIC

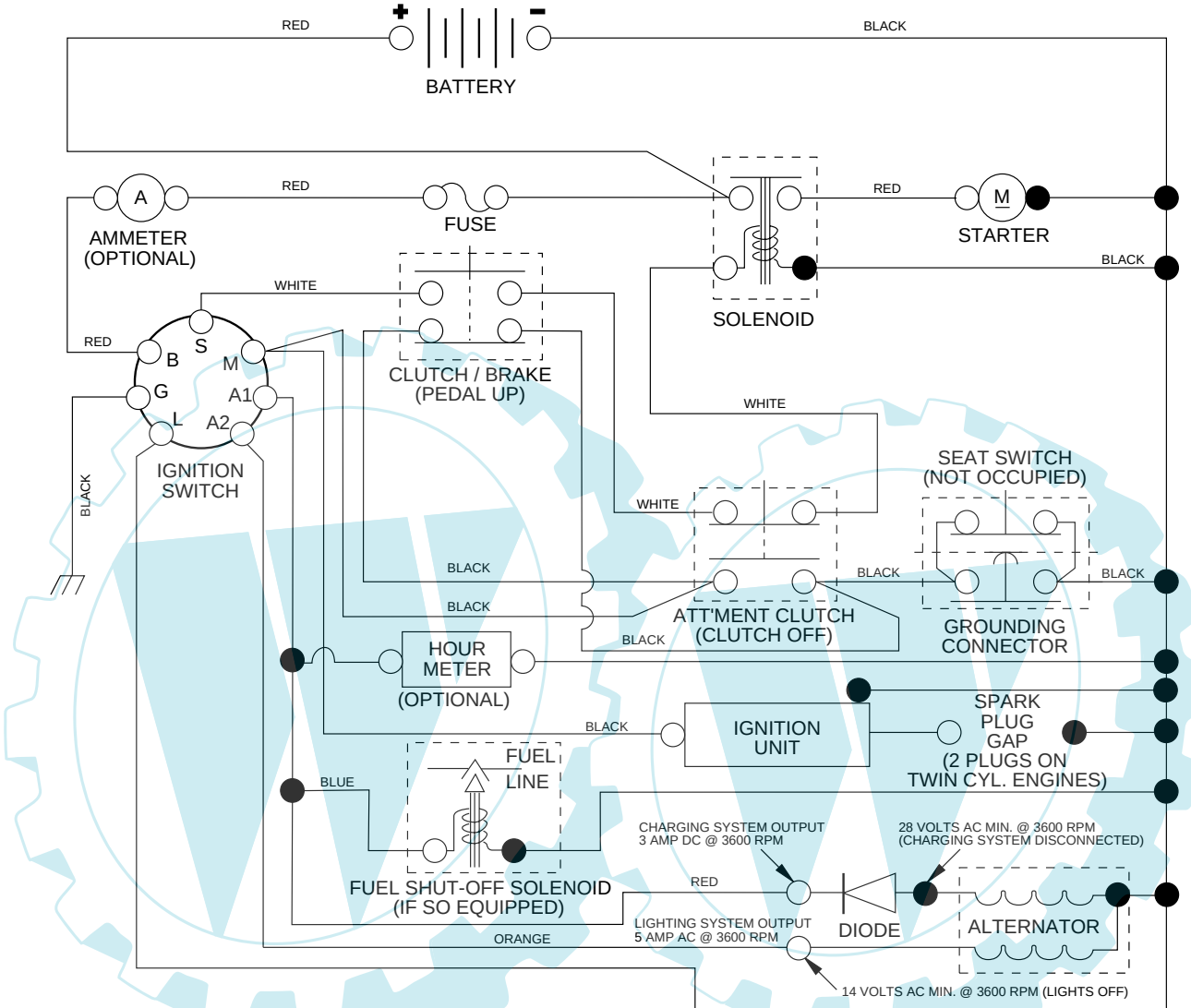

NOTE

YOUR TRACTOR IS EQUIPPED WITH A SPECIAL ALTERNATOR SYSTEM. THE LIGHTS ARE NOT CONNECTED TO THE BATTERY, BUT HAVE THEIR OWN ELECTRICAL SOURCE. BECAUSE OF THIS, THE BRIGHTNESS OF THE LIGHTS WILL CHANGE WITH ENGINE SPEED. AT IDLE THE LIGHTS WILL DIM. AS THE ENGINE IS SPEEDED UP, THE LIGHTS WILL BECOME THEIR BRIGHTEST.

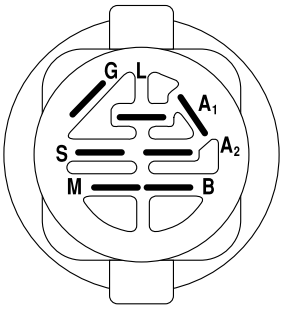

IGNITION SWITCH

POSITION	CIRCUIT	"MAKE"
OFF	M+G+A1	NONE
RUN/LIGHT	B+A1	A2+L
RUN	B+A1	NONE
START	B + S + A1	NONE

WIRING INSULATED CLIPS

NOTE: IF WIRING INSULATED CLIPS WERE REMOVED FOR SERVICING OF UNIT, THEY SHOULD BE REPLACED TO PROPERLY SECURE YOUR WIRING.

Ihr Ersatzteilspezialist im Internet